CONFIGURED

DATA SHEET

POWERJACKS
PRECISION ACTUATION

Inverted, Translating

MODEL: TM2500-16

1 ton
POWERJACKS

Product Image

Configured Product Image

www.powerjacksusa.com
sales@powerjacksusa.com
Tel: (248) 510-2837

Powerjacks USA LLC
6500 Chase Rd
Dearborn MI 48126 (USA)
Tax ID 99-364619

CONFIGURED

DATA SHEET

POWERJACKS
PRECISION ACTUATION

Inverted, Translating

MODEL: TM2500-16

1 ton
POWERJACKS

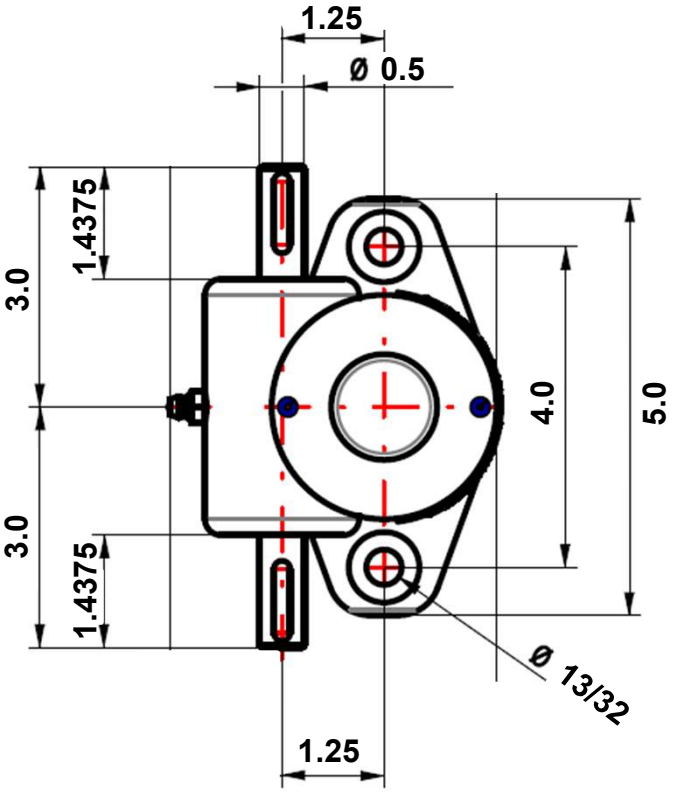

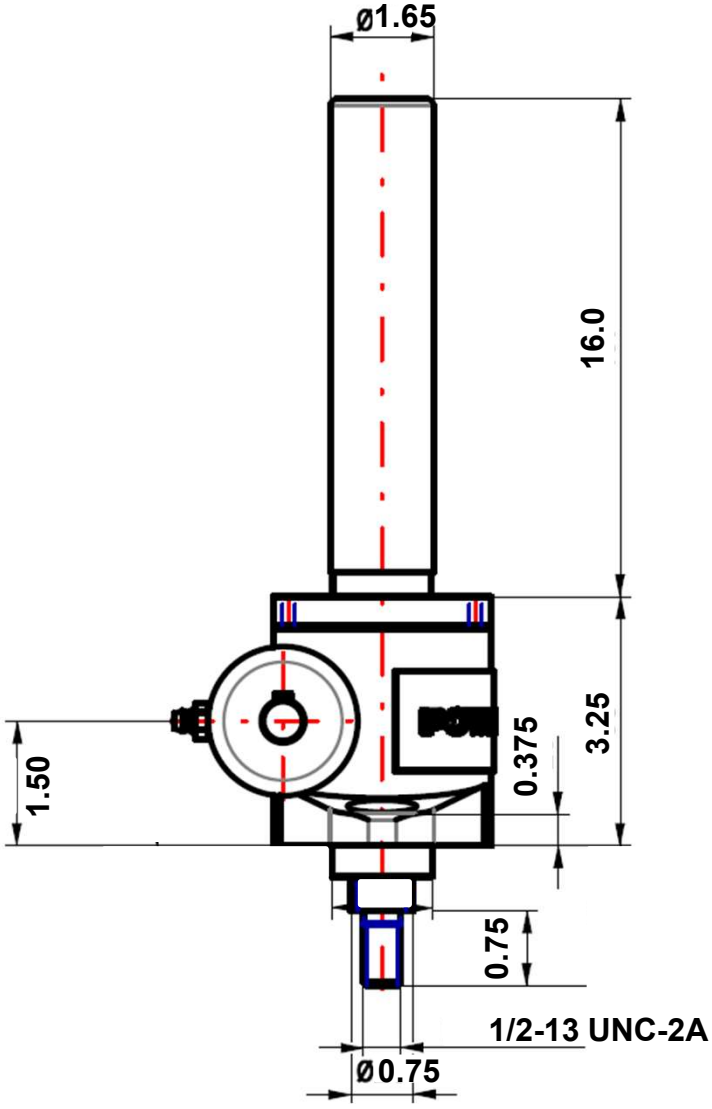

www.powerjacksusa.com
sales@powerjacksusa.com
Tel: (248) 510-2837

Powerjacks USA LLC
6500 Chase Rd
Dearborn MI 48126 (USA)
Tax ID 99-364619

CONFIGURED

DATA SHEET

POWERJACKS
PRECISION ACTUATION

Inverted, Translating

MODEL: TM2500-16

1 ton
POWERJACKS

CONFIGURATION SUMMARY

Gear Ratio	5:1
Lifting Screw Lead Option 1 Lead	Option 1 Lead 0.75 DIA X 0.2 Lead Right Hand (Standard)
Worm Shaft Type Standard Material	Standard Material
Stroke (inch)	16
Worm Shaft Ends	Both
Screw End Fitting	Threaded
Gearbox Mounting	Base Mount
Lifting Screw Material	Standard
Lifting Screw Covers	Cover Pipe and No Bellows Boot
Drive Type	None
Mounting Kit for Limit Switches & Stop Nuts	None
Paint - Lubricant	Standard Paint, Lubricant and Seals

www.powerjacksusa.com
sales@powerjacksusa.com
Tel: (248) 510-2837

Powerjacks USA LLC
6500 Chase Rd
Dearborn MI 48126 (USA)
Tax ID 99-364619